Installation Instructions

Model: 5-1/2” Stainless Steel Chair Rail Wall Guard

Please read all instructions before installing wall guard.

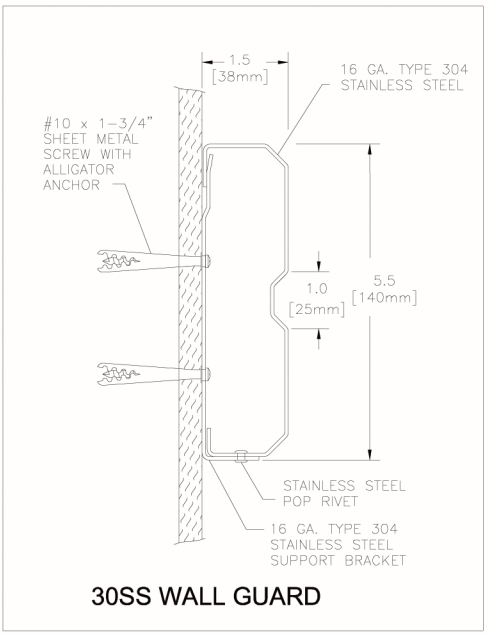

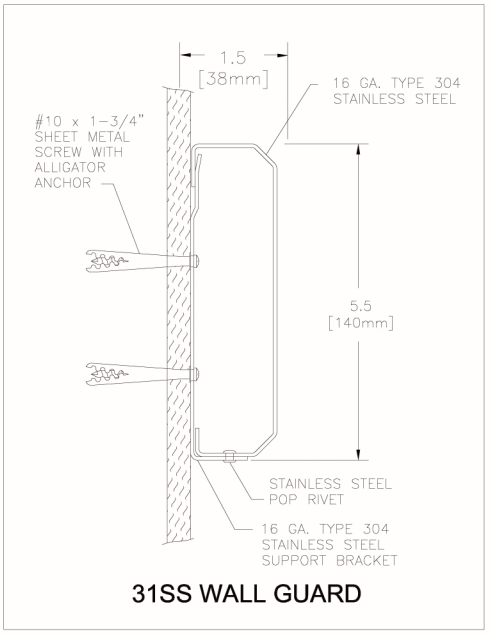

FIG. 1

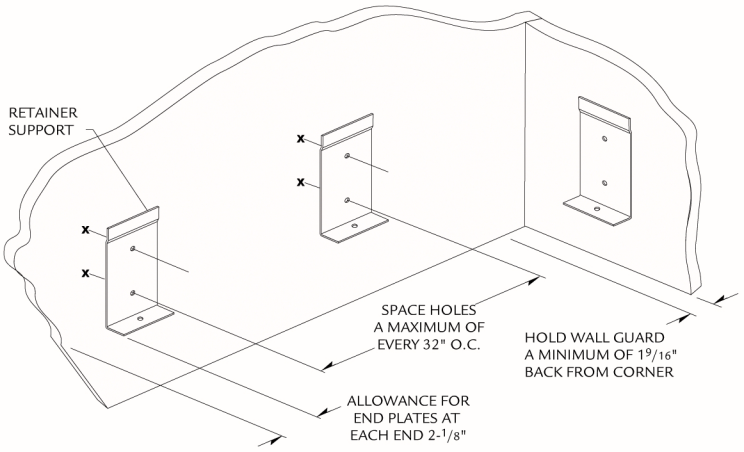

1. Determine height of wall guard. Deduct 3/16" and snap chalk line. Position top edge of retainer support against chalk line. Transfer mounting holes to wall. See Figure 1.

EAGLE MAT
& FLOOR PRODUCTS
932 Hungerford Dr. #37B
Rockville, MD 20850
1-877-333-1018
www.eaglemat.com

Installation Instructions

Model: 5-1/2” Stainless Steel Chair Rail Wall Guard

FIG. 2

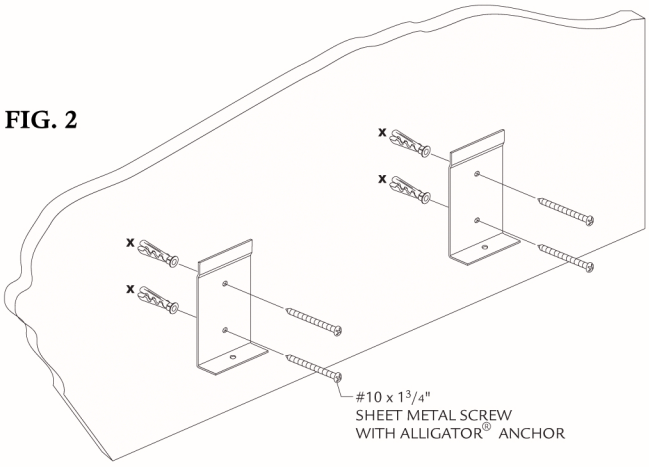

2. Drill each marked hole with a 1/4" drill bit and position alligator anchors into holes. Mount retainer supports on wall and tighten screws to secure.

See Figure 2.

FIG. 3

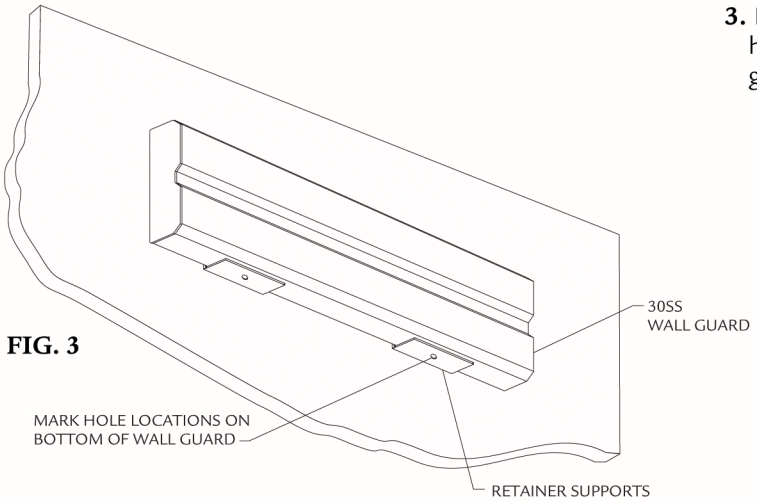

3. Position wall guard on the retainer supports. Transfer hole locations on the bottom of the support to the wall guard. Drill 9/64" holes at each mark. See Figure 3.

FIG. 4

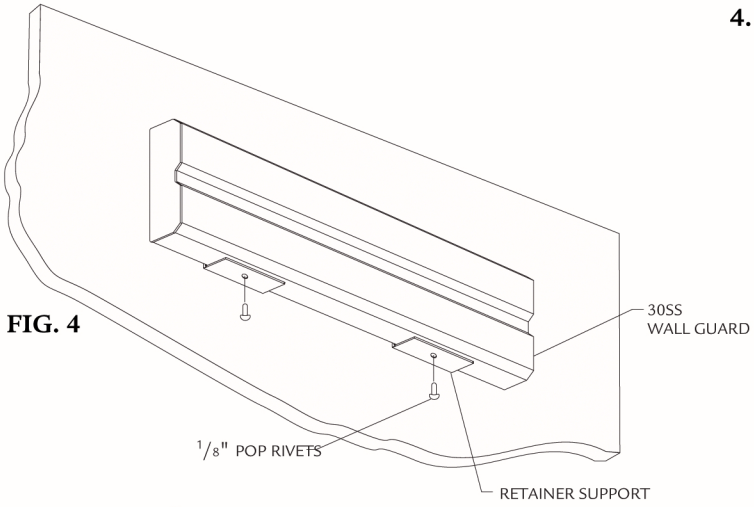

4. Position wall guard on support and secure with 1/8" pop rivets. See Figure 4.

EAGLE MAT
& FLOOR PRODUCTS
932 Hungerford Dr. #37B
Rockville, MD 20850
1-877-333-1018
www.eaglemat.com